Conform copy

BOOK K PAGE 197 D
No. 2186560000

WATERFORD PARKING CONDOMINIUMS

LOTS 1 THROUGH 15 OF BLOCK 23,
ALL WITHIN THE ORIGINAL PLAT OF BAYVIEW,
SEC. 34, T.54N., R.2W., B.M.,
KOOTENAI COUNTY, IDAHO

TYPICAL PARKING UNIT AIRSPACE ENVELOPE
21.2' x 12.7' x 10'
For Parking Units 1 through 17 & 59 through 61
191 Sq. Ft. (Typ. for these Units)

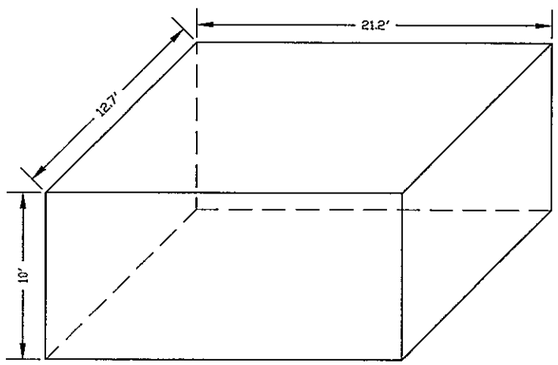

TYPICAL PARKING UNIT AIRSPACE ENVELOPE
23.3' x 9' x 16.7' x 11.2' x 10'
For Parking Units 18 through 58
180 Sq. Ft. (Typ. for these Units)

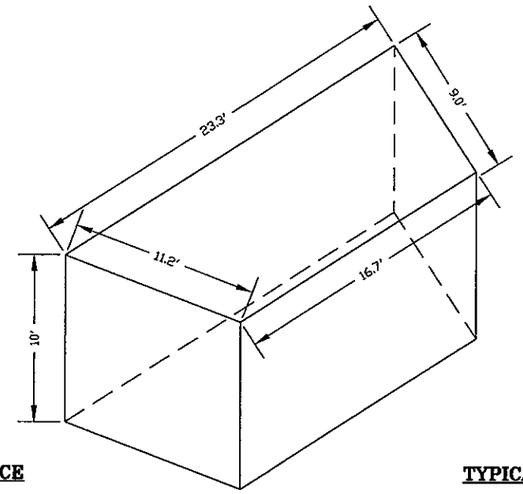

TYPICAL PARKING UNIT AIRSPACE ENVELOPE
15' x 9' x 10'
For Parking Units 62 through 64
135 Sq. Ft. (Typ. for these Units)

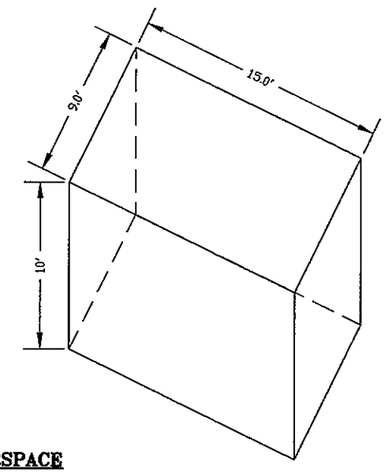

TYPICAL PARKING UNIT AIRSPACE ENVELOPE
21.2' x 11.3' x 10'
For Parking Units 65 through 92
170 Sq. Ft. (Typ. for these Units)

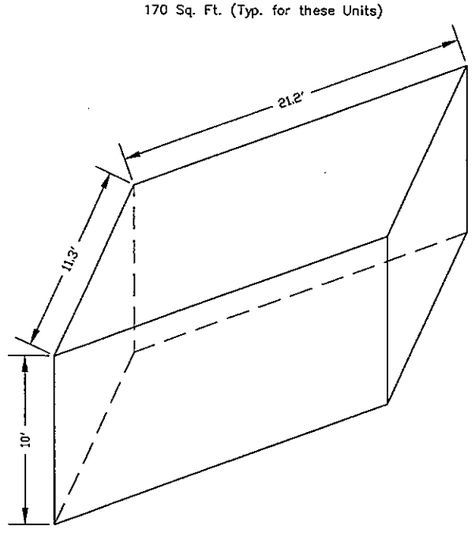

TYPICAL PARKING UNIT AIRSPACE ENVELOPE
18' x 7.5' x 10'
For Parking Units 93 through 99
135 Sq. Ft. (Typ. for these Units)

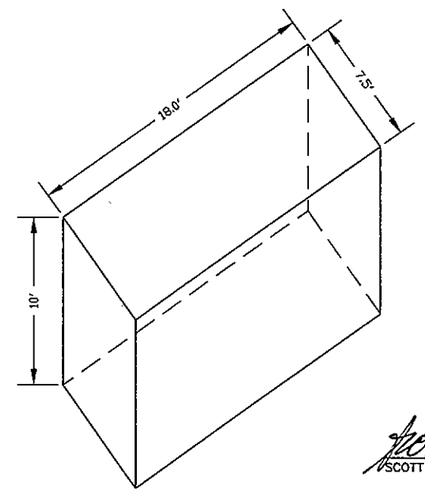

Scott M. Rasor 10/30/08
SCOTT M. RASOR, PLS 6374 DATE

PROFESSIONAL LAND SURVEYOR REGISTERED 6374 STATE OF IDAHO SCOTT M. RASOR

SHEET 5 OF 7

34	SCALE: NA	DRAWN: SAQ	JOB NO: WPH08.039 DWG: WPH08039CP_PLAT.dwg
	DATE: OCT. 30, 2008	CHECKED:	CREW: CVF & ASH

MECKEL
MECKEL ENGINEERING & SURVEYING
3906 N. SCHREIBER WAY, COEUR D' ALENE, IDAHO, 83815 (208)667-4638 fax (208)664-3347

WATERFORD PARKING CONDOMINIUMS
LOTS 1 THROUGH 15 OF BLOCK 23, ALL WITHIN THE ORIGINAL PLAT OF BAYVIEW,
SEC. 34, T.54N., R.2W., B.M.,
KOOTENAI COUNTY, IDAHO