IDAHO COMMUNITY TREES

No. 79
Summer
2016

A NEWSLETTER FROM THE IDAHO DEPARTMENT OF LANDS - COMMUNITY FORESTRY PROGRAM AND IDAHO LANDS RESOURCE COORDINATING COUNCIL

Coordinator's Column

Don't miss a great training opportunity. See page 3.

Resilience, Hope, Faith

Trees that Sustain Us

The scientist in me tends to focus on the tangible, quantifiable values provided by trees in our cities and towns. In past issues, I've written a lot about the functional benefits of trees—storm water control, air quality improvement, energy consumption reduction, human health and more—and highlighted Idaho projects that use trees strategically to address these issues.

Beyond the tangible, however, is a deeply emotional connection we have with trees. Many of us fondly remember a certain tree from our childhood—one in which we climbed, daydreamed under, or from which we gathered fruit or nuts. We plant trees to honor or memorialize special people in our lives, mark significant events, and add beauty. Trees are special not only for what they do, but for how they make us feel.

I was reminded of this during an Arbor Day event I attended at the Touchmark Retirement Community in Meridian. Touchmark staff successfully applied to receive a one-year-old elm sapling, grown from a seed of the century-old American elm that once shaded a parking lot about 100 feet from the Alfred P. Murrah Federal Building in Oklahoma City. Twenty-one years ago, at 9:02 AM on April 19, 1995, a 4,000-pound bomb destroyed the building, killing 168 people, injuring hundreds, and forever changing the city and our nation. The force of the blast tore branches from the tree and drove glass and debris into its bark. Cars burning beneath it caused more damage. A year after the blast, however, the tree began to leaf out again. For many, it symbolized resilience, healing and hope in the face of an unimaginable tragedy. Oklahoma's Community Forestry Coordinator, Mark Bays, led an extraordinary effort to save and protect the tree, including modifying the site so that the tree not only survived, but now thrives. Today, the "Survivor Tree" is an integral component of the Oklahoma City National Memorial. Mark also works with nurseries throughout Oklahoma to grow the seeds of this elm for planting in public and private locations across the country, ensuring that the tree lives on, marking the event and memorializing the innocent people who were lost that day.

Photo courtesy of Touchmark

Planting offspring of the Oklahoma City Survivor for the first time in Idaho is (left to right) Oklahoma Urban Forestry Coordinator Mark Bays, Idaho State Controller Brandon Woolf, Touchmark Life Enrichment Director Jim Johnson, Touchmark Executive Director Mathew Hoskin, and Idaho Urban Forestry Program Coordinator David Stephenson. The event took place on the grounds of Touchmark Retirement Community in the City of Meridian.

To help plant Idaho's first Survivor Tree, Mark Bays personally brought a sapling from Oklahoma and participated in the ceremony. During the event, Mark told residents about the significant role this tree has had in the healing process, and how it continues to serve as a symbol of resilience and faith. Representing the State of Idaho, State Controller Brandon Woolf read a special Arbor Day Proclamation and spoke of the connection and value of trees to all of us. Mathew Hoskin, Touchmark Executive Director, described the honor of Touchmark's selection as a host location for one of the saplings from the Survivor Tree.

From ancient times to the present, trees have served as traditional, spiritual and universal symbols of beauty, transformation, strength, growth, wisdom and more. They both inspire and calm us. At the Oklahoma City National Memorial, the inscription carved into a low wall encircling a promontory around the survivor tree reads:

"The spirit of this city and this nation will not be defeated; our deeply rooted faith sustains us."

For more information about the memorial and the Survivor Tree, please type "Oklahoma Survivor Tree" into your favorite search engine.

-- David Stephenson
Community Forestry Coordinator

McCall Tries a Different Approach to Arbor Day

Attendance has been diminishing at Arbor Day activities in the City of McCall over the last couple of years. This year, City Forester Kurt Wolf decided it was time to shake things up and try something different that would attract the public and also offer them an opportunity to learn something while having a great time.

McCall created a partnership with Franz Witte Nursery to develop an event that would be mutually beneficial. Franz Witte typically kicks off the season in May and wanted to host an event that would attract the public and encourage the planting of trees and shrubs. Ken had the same goals as well as wanting to promote McCall's community forestry program and make the public aware that McCall is a Tree City USA. And since there is no rule that says Arbor Day must be in April, the event was scheduled for May and held jointly. The event was held at the Franz Witte nursery. The company arranged for live music, its staff grilled burgers and hot dogs, and the Salmon River Brewing Company was on hand to sell and serve beer. McCall's tree committee members made themselves available for questions regarding planting, pruning, forest management, nursery & landscaping matters. Civic and nonprofit groups set up booths, with participation by the Snowdon Wildlife Sanctuary, the Firewise Committee, the McCall Outdoor Science School and others.

McCall's mayor

(Continued on pg. 3...)

IDAHO COMMUNITY TREES

Idaho Community Trees is published four times a year by the Idaho Department of Lands - Community Forestry Program.

For editorial matters: James R. Fazio, Editor. Ph: 208-882-0965; email: jfazio@turbonet.com.

For address changes, program assistance or additional information, contact IDL, Community Forestry Coordinator, 3284 W. Industrial Loop, Coeur d'Alene, ID 83815.
Ph: 208-666-8621; fax 208-769-1524; email: communitytrees@idl.idaho.gov.

Field Contacts

Northern Idaho: Stephen Drinkard, Comm. For. Ass't. Ph.: 208-610-9999; email: drinkard.s@gmail.com

Central Idaho: Position Vacant

Southern Idaho: Gerry Bates, Comm. For. Ass't. Ph: 208-681-5964; email: plantingidaho@gmail.com

Treasure Valley Canopy Network (www.tvcanopy.net): Lance Davisson. Ph.: 208-994-1135; email: coordinator@tvcanopy.net

Permission is hereby given to duplicate and distribute this newsletter for educational purposes.

Printed on recycled paper

Emerald Ash Borer Spreading

It is probably only a matter of time until the emerald ash borer (EAB) crosses our borders and invades Idaho. This destructive pest has wreaked havoc on ash trees of all species in the Midwest and eastern states. In May it was discovered in Texas and in June Nebraska announced it in that state. Previous sightings have been reported in Kansas and Colorado.

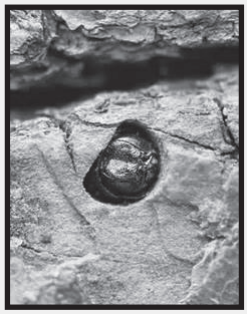

The unique D-shaped exit hole is a sure sign that the emerald ash borer is in the neighborhood.

In making the announcement in Nebraska, State Forestry Deputy Director John Erixson said "Now is a good time for residents in municipalities throughout the state to take proactive steps to deal with EAB. Once EAB is found in an area, most ash trees are killed within 10–15 years."

The only bright spot is that there is preventative treatment available in the form of trunk injections. Mark Harrell, Forest Health Program Leader with the Nebraska Forest Service, told residents, "The best candidates for treatments are healthy, high-value trees that are in a good location. Trees in poor condition or located under wires or too close to sidewalks or buildings generally should be removed rather than treated."

Treatments should not be started until a population of EAB is confirmed to be within 10 – 15 miles. Then the treatments need to be applied by a professional arborist and re-applied every one to two years for the remaining life of the tree. One action that should be taken now is to avoid planting ash trees en masse. For example, ash cultivars have long been popular for planting in parking lots, around businesses and on newly-developed institutional grounds. Such monoculture plantings are an invitation for disaster and a waste of money.

For more information, please visit www.emeraldashborer.info/ . The Arbor Day Foundation also has an excellent summary about EAB. For a copy, visit arborday.org/bulletins and search for Tree City USA Bulletin No. 76, How to Fight the Emerald Ash Borer.

Mayor Jackie Aymon reads the Arbor Day Proclamation at Franz Witte Nursery as the city tried a different approach to the traditional Arbor Day celebration.

Photo by Dave Jedry, Franz Witte Nursery

(Continued from pg. 2...)
read the Arbor Day Proclamation and accepted the Tree City USA Award and the Tree City USA Growth Award from John Lillehaug of the Idaho Department of Lands. Originally, organizers planned for short presentations on tree-related topics. Instead, it was kept open for discussion and questions and this worked well. Is it time for your community to try something different next year? Now is the time to start brainstorming and planning.

Idaho to Host ISA Conference

Boise will be host to the 37th Pacific Northwest ISA Annual Training Conference. This provides an excellent educational opportunity for arborists, urban foresters, tree board members and anyone with an interest in community trees! Put it in ink on your calendar for September 16–19, 2016.

This year's theme is "Connect, Cultivate, Grow!" The training conference will highlight the numerous ways in which the people in the green industries utilize their specialized skills and knowledge within our communities – literally "Connecting" with the community, "Cultivating" information, and "Growing" relationships. The theme is woven through the entire conference via speakers' topics, sponsors, and exhibitors; and as always, attending this major annual event is an excellent tool for connecting with peers, earning continuing education units, and growing new and productive relationships.

The training conference also includes the PNW Tree Climbing Competition and Masters' Challenge, Tree Care Academy, Field Day, Special Events, and, of course, the indoor sessions that include tracks for Climbing, Commercial, Municipal, and Utility arborists. You can look forward to hearing from industry leaders such as Ed Gilman, Jim Urban, John Ball, and Michelle Mitchell. Local PNW tree experts Jim Flott and Brian French will be on hand to present during the Field Day portion of the conference.

To register, go to www.pnwisa.org and click on the link near the bottom of the page. We look forward to seeing you there!

Help Promote Tree City USA

There are currently 68 communities of all sizes in Idaho that have been recognized with Tree City USA designation. If yours isn't one of them, now is the time to get started. An 8-page bulletin was recently created to help and can be downloaded free. It does an excellent job of explaining why it is important to receive this award–and how to do it. It is titled Tree City USA – Take Pride in a Greener Community. To print your copy or read it online, just go to arborday.org and type in the search box, "Tree City USA Manual."

Summer/Fall 2016 Events Calendar

August 13-17
International Society of Arboriculture Annual Conference and Trade Show, Fort Worth, TX. Visit www.isa-arbor.com/events/conference/ for more information.

September 16-19
Pacific Northwest Chapter ISA Annual Conference and Trade Show, Boise, ID. Visit http://pnwisa.org/classes-events/annual-training-conference/ for more information and to register.

October 6
Creating Wildlife Habitat Trees, Spokane, WA. Visit http://pnwisa.org/ for more information and to register.

November 15
Society of Municipal Arborists Conference, Indianapolis, IN. Visit www.urban-forestry.com/ for more information and to register.

November 16-17
Partners in Urban Forestry Conference, Indianapolis, IN. Visit www.arborday.org/programs/pcf/ for more information and to register.

Urban Forest Connections Webinar Series:
www.fs.fed.us/research/urban-webinars/ Webinars are one hour starting at 10 AM PDT, 11 AM MDT.

❒ August 10, Sept 14 and Oct 12 – Topics TBD—visit website for topics and past webinars

❒ I-Tree Online Workshops (http://www.unri.org/itreeworkshops/)

- ❒ Aug 16: What's New in i-Tree Eco
- ❒ Sept 20: Looking at i-Tree Hydro
- ❒ Oct 19: Using i-Tree Design and Canopy
- ❒ Nov 16: Taking Stock of Street Trees: i-Tree Streets
- ❒ Dec 21: i-Tree Roundtable: Answering your questions on i-Tree

Upcoming Certified Arborist (CA), Certified Tree Worker (CTW), Municipal Specialist (MS) and Utility Specialist (UA) written Exams

Sept. 16—Boise, ID (CA, UA, MS, CTW-written exam)
Nov. 19—Pocatello, ID (CA, UA, MS, CTW-written exam)

For information or to register, visit http://www.isa-arbor.com/certification/becomeCertified/index.aspx

Community Forestry Program
3284 Industrial Loop
Coeur d'Alene, ID 83815

PRSRT STD
U.S. POSTAGE PAID
MOSCOW, ID
PERMIT NO. 455

This newsletter is made possible in part by a grant from the USDA Forest Service. The USDA prohibits discrimination in all its programs and activities on the basis of race, color, national origin, gender, religion, age, disability, political beliefs, sexual orientation, and marital or family status. To file a complaint call 202-720-5964

Tree tip

Locate the Root Flare Before Planting

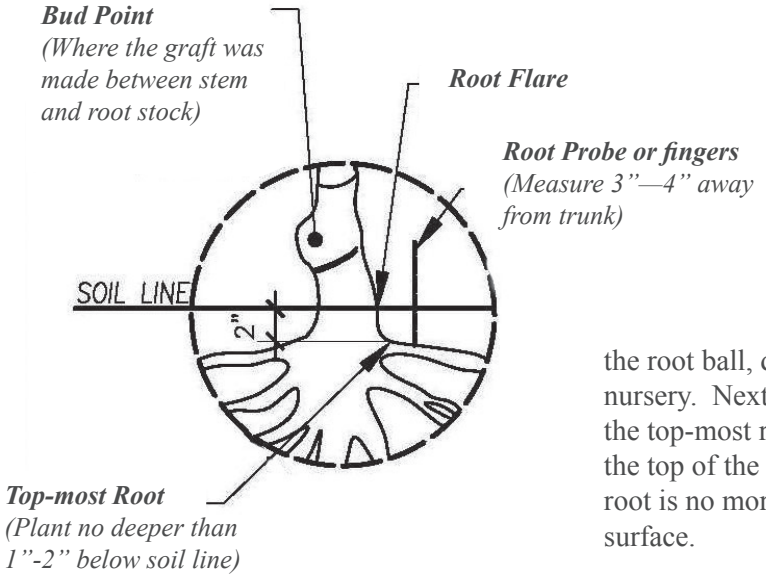

The key to giving a tree a healthy start in the planting site is to plant at the right depth. The importance of this cannot be overstressed!

Begin by finding the root collar (the transitional area between trunk tissue and root tissue). The root collar may be buried within the root ball, depending upon practices at the tree nursery. Next, use your fingers or a probe to locate the top-most root. Shave off the excess soil from the top of the root ball. Plant so that the top-most root is no more than 1 or 2 inches below the soil surface.